PRODUCED BY AN AUTODESK EDUCATIONAL PRODUCT

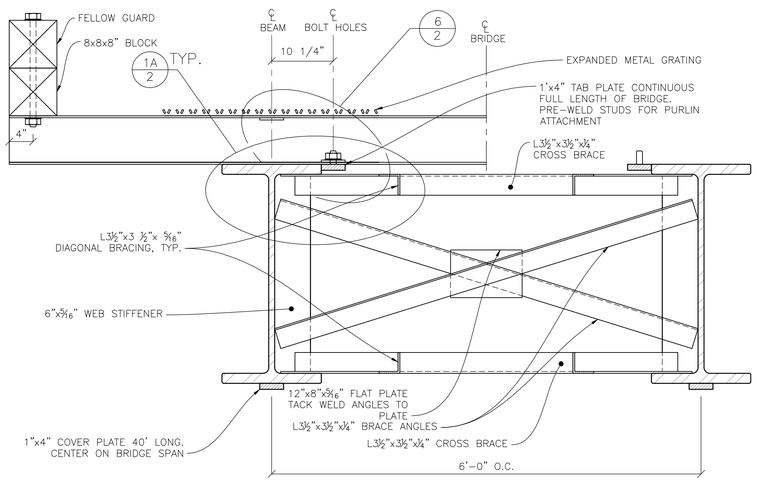

1/2 BRIDGE SECTION
1"=1'-0"

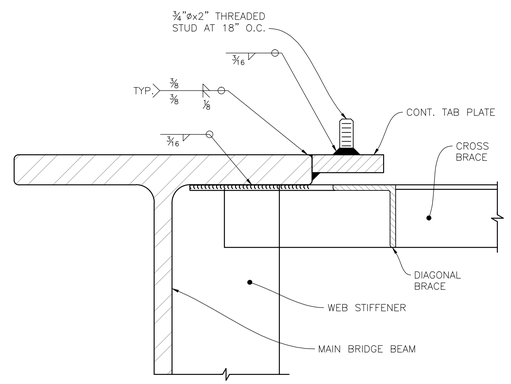

1A/2 TAB PLATE
3" = 1'-0"

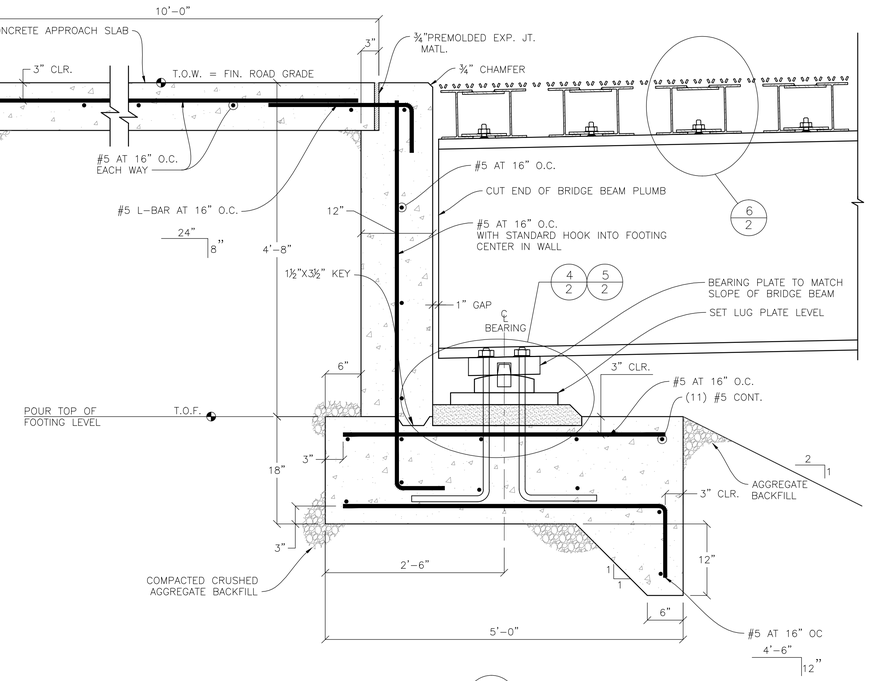

2/2 ABUTMENT SECTION
1"=1'-0"

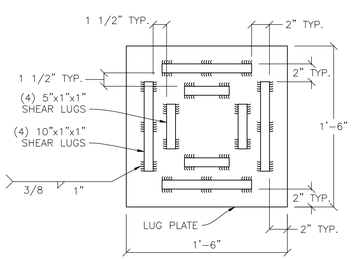

3/2 SHEAR LUG LAYOUT
1 1/2"=1'-0"

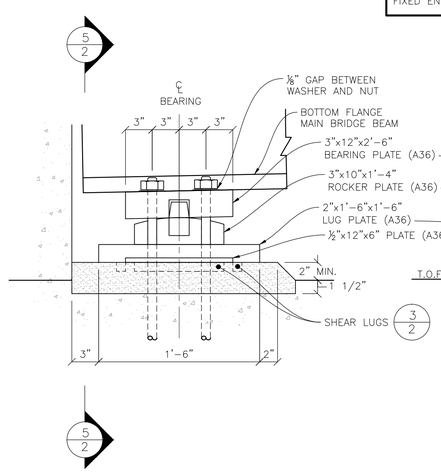

4/2 BEARING ELEVATION
1 1/2"=1'-0"

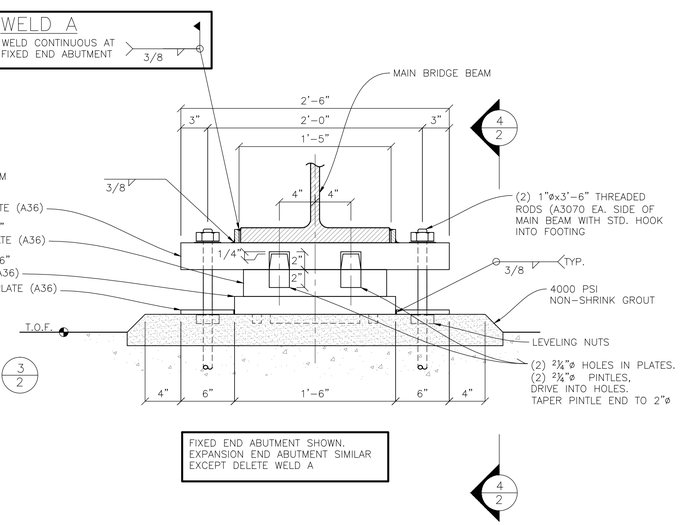

5/2 BEARING ELEVATION
1 1/2"=1'-0"

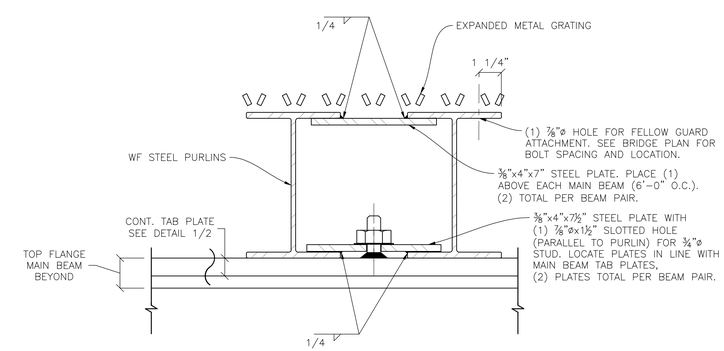

6/2 PURLIN SECTION
3" = 1'-0"

CHEMEKETA COMMUNITY COLLEGE
4000 LANCASTER DR NE
SALEM OR 97309

GEORGIA-PACIFIC, INC.

FALL CREEK BRIDGE

DETAILS

JAMES SHARP

3-14-12

SHT 2 OF 2

PRODUCED BY AN AUTODESK EDUCATIONAL PRODUCT
PRODUCED BY AN AUTODESK EDUCATIONAL PRODUCT
PRODUCED BY AN AUTODESK EDUCATIONAL PRODUCT